THIS DRAWING IS UNPUBLISHED. RELEASED FOR PUBLICATION -,- .
© COPYRIGHT - BY TYCO ELECTRONICS CORPORATION. ALL RIGHTS RESERVED.

LOC	DIST
DF	DO

REVISIONS

P	LTR	DESCRIPTION	DATE	DWN	APVD
	R	REV PER 0H14-0159-03	3-04	CT	LO

WHEN ORDERING CONTACT ON TAPE, ORDER BY THE TAPE NUMBER PLUS THE PACKAGING CODE AS FOLLOWS:

2. FOR USE WITH AMP TAPETRONIC, PNEUMATIC TOOL-
   A. 1000 PARTS TO A BOX ADD PACKAGING CODE: 1MBOX

3. FOR USE WITH 4/8 INDENT STRIPPER CRIMP-
   A. 1000 PARTS TO A REEL ADD PACKAGING CODE: 1MREEL
   B. 5000 PARTS TO A REEL ADD PACKAGING CODE: 5MREEL

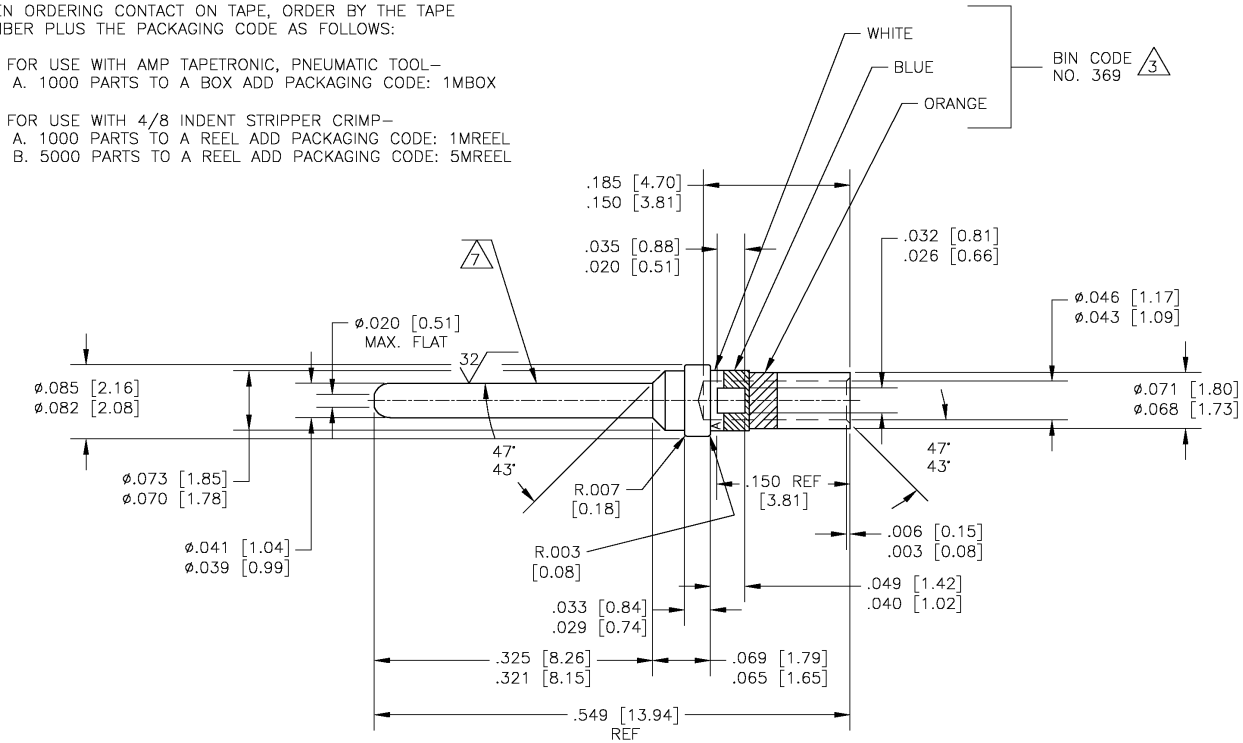

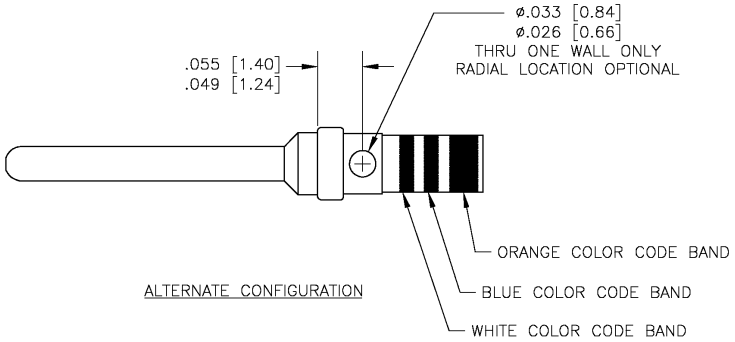

ALTERNATE CONFIGURATION

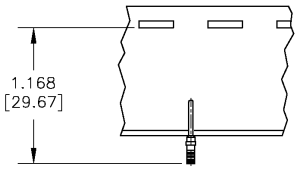

1. MATERIAL: COPPER ALLOY PER MIL-C-39029 & MIL-DTL-24308.
2. ALL DIMENSIONS APPLY AFTER PLATING.
3. THIS DRAWING COMPLIES WITH SPECIFICATION MIL-C-39029/64 & M24308/11-1.
4. ALL DIAMETERS CONCENTIC WITH EACH OTHER WITHIN .004 T.I.R.
5. PIN MATES WITH SOCKET 205090 (MIL-C-39029/63).
6. ALL SURFACES HAVE 63 OR BETTER FINISH, UNLESS SHOWN.
7. POINT OF PLATING MEASUREMENT .188 [4.78] FROM TIP OF PIN.
8. PLATING: GOLD PER ASTM-B-488 (TYPEII) OVER NICKEL PER QQ-N-290.
9. PLATING: GOLD PER ASTM-B-488 (TYPEII) OVER COPPER PER MIL-C-14550, CLASS 4.
10. PLATING: GOLD PER ASTM-B-488 (TYPE II, CLASS 0) OVER NICKEL PER QQ-N-290.

DESCRIPTION	PLATING	PART NO.
WITHOUT COLOR CODE	10	1-205089-0
WITHOUT COLOR CODE	9	205089-4
CONTACT ON TAPE	SAME AS -1	205089-2
AS SHOWN	8	205089-1

THIS DRAWING IS A CONTROLLED DOCUMENT.

DIMENSIONS: INCHES

TOLERANCES UNLESS OTHERWISE SPECIFIED:
0 PLC ± -
1 PLC ± -
2 PLC ± -
3 PLC ± -
4 PLC ± -
ANGLES ± -

MATERIAL 1
FINISH -

DWN J. KAISER 25AUG2003
CHK D. MILLER 10-13-03
APVD D. MILLER 10-13-03
PRODUCT SPEC -
APPLICATION SPEC -
WEIGHT -

tyco Electronics
Tyco Electronics Corporation
Harrisburg, PA 17105-3608

NAME PIN SIZE 20 CONTACT, AMPLIMITE

SIZE	CAGE CODE	DRAWING NO	RESTRICTED TO
A2	00779	C-205089	-

CUSTOMER DRAWING | SCALE 10:1 | SHEET 1 OF 1 | REV R

205089